M-POWER-2T

AC POWER & DATA CONNECTIVITY SOLUTION

M-POWER-2TGG-A6-GGATP

Distributed by

MORMAX

Mormax Company, Inc.
8 Westchester Plaza
Elmsford, NY 10523

914-699-0101
sales@mormax.com
mormax.com

Metro Light & Power's line of power & data solutions offers sophisticated design elements combined with greater ease of installation. Streamlined and low-profile, enhanced by side-exiting cords, our outlets advance the industry with their cutting edge look and feel. We believe flexibility is key, and we provide a variety of mounting options, including the ability to mount in limited spaces. Our outlets are available in many finishes and configurations, in addition to a custom color and finish capability for our clients.

Trim Plate Finish: **OMNIGRAPHIC™ GRAY GRANITE (ABS)**

Custom Finishes Available

M-POWER-2TGG-A6-GGATP

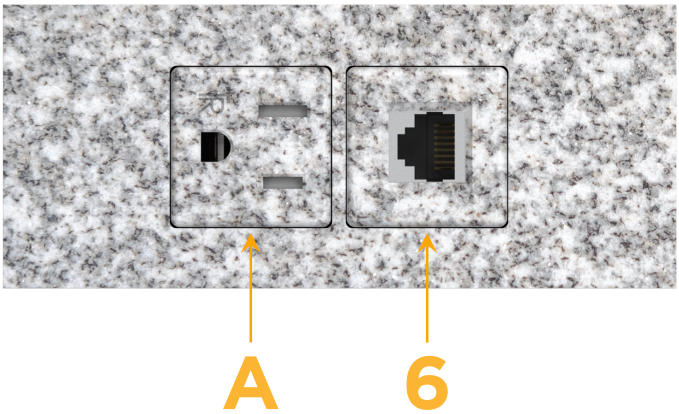

Features:

Module/Port Options:	
A	Tamper Resistant AC Receptacle
E	USB-A & USB-C (20W)
M	Double USB-A (Fast Charging Ports - 18W)
H	HDMI
6	CAT 6
12	RJ 12
X	Switched AC
Y	3-Way Switch (Low Voltage)
V	USB-C (45W High Speed Charging Port)
S	USB-C (25W High Speed Charging Port)
R	Switched AC (Rocker Switch)
D	Dimmer Switch
Plug:	
	Supplied with Low Profile Flat 45° Angle 120 VAC Plug
	Optional Standard Straight 120 VAC Plug
	Optional Straight 120 VAC Pass-through Plug

- CLEAN, COMPACT DESIGN
- STREAMLINED
- LOW PROFILE
- SIDE-EXITING CORDS
- PLUG & PLAY
- 6′ AC CORD & PLUG (FLAT PLUG STANDARD)
- CUSTOMIZABLE CONFIGURATIONS AND FINISHES
- UL LISTED FOR MOUNTING IN FURNITURE
- 15A

© 2025 Metro Light & Power, LLC. All rights reserved. US Patent No(s) 10,841,990; 10,847,959; other Patents Pending
Metro Light & Power, LLC | 11 Smith St Englewood, NJ 07631 | T: 201-416-4160 | F: 208-979-4613 | info@metrolightandpower.com | www.metrolightandpower.com

c UL us LISTED E491161 FURNITURE POWER DISTRIBUTION UNIT

M-POWER-2T

AC POWER & DATA CONNECTIVITY SOLUTION

M-POWER-2TGG-A6-GGATP

Distributed by MORMAX

Mormax Company, Inc.
8 Westchester Plaza
Elmsford, NY 10523

914-699-0101
sales@mormax.com
mormax.com

Specs:

Modules/Ports:	
A	Tamper Resistant AC Receptacle
6	CAT 6

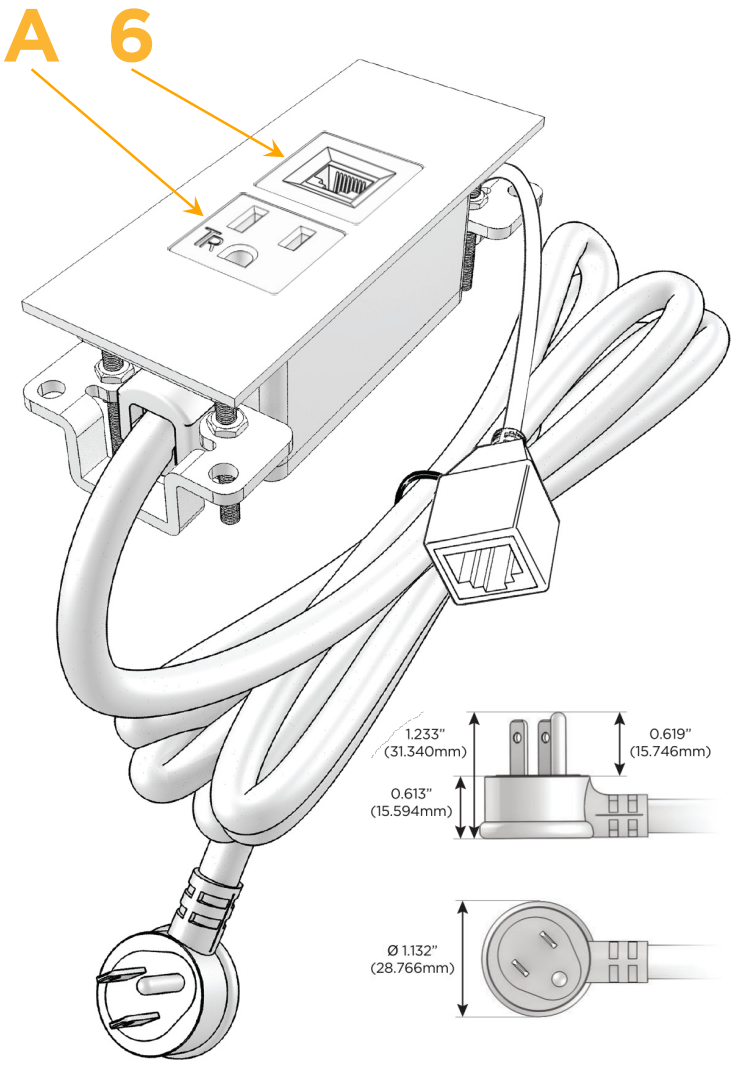

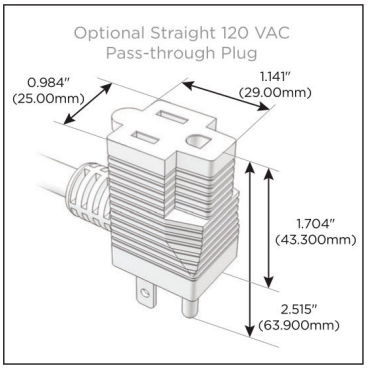

TOP

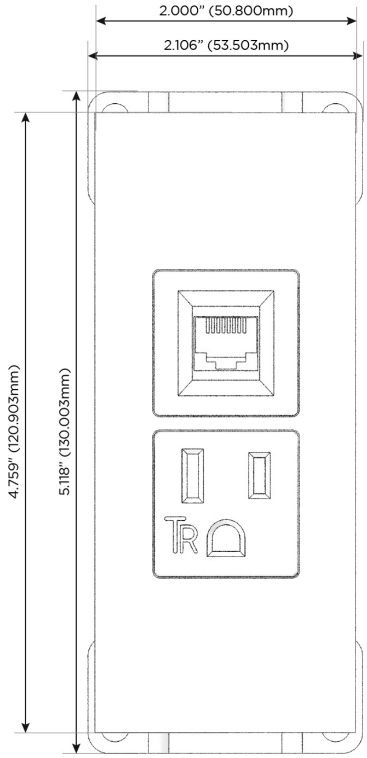

END

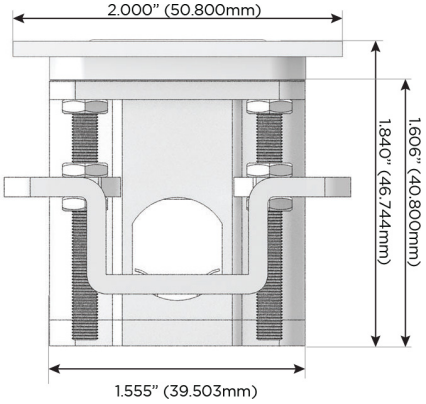

SIDE

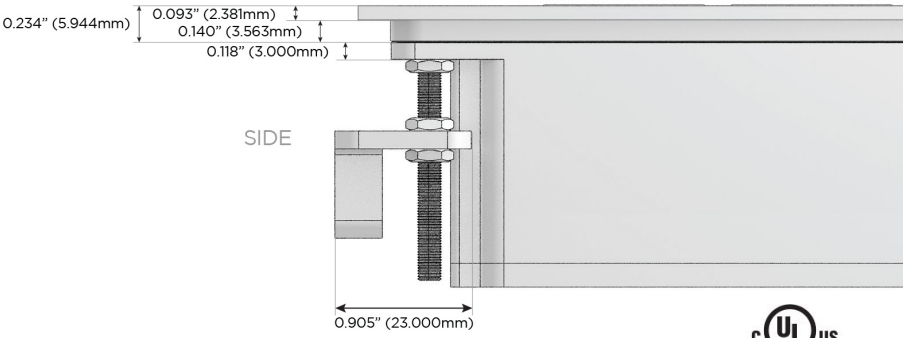

© 2025 Metro Light & Power, LLC. All rights reserved. US Patent No(s) 10,841,990; 10,847,959; other Patents Pending
Metro Light & Power, LLC | 11 Smith St Englewood, NJ 07631 | T: 201-416-4160 | F: 208-979-4613 | info@metrolightandpower.com | www.metrolightandpower.com

c UL us LISTED E491161 FURNITURE POWER DISTRIBUTION UNIT